DELAWARE LEHIGH AMATEUR RADIO CLUB Inc.

SEPTEMBER 2020

W3OK CORRAL

Club Meeting September 3rd, 7:30PM
Via ZOOM

SEPTEMBER MEETING PROGRAM

“Linux For Hams”

George / N3SQD

AUGUST PROGRAM



“ The W3OK Repeater Systems”
Barry N3NVA

amazonsmile

You shop. **Amazon gives.**
Amazon will donate 0.5% of the price of your eligible purchases to the Delaware-Lehigh Amateur Radio Club, Inc.
To sign up, go to **AmazonSmile** https://smile.amazon.com/.
You will be prompted to select a charitable organization.
Enter **Delaware-Lehigh Amateur Radio Club Inc**.
Bookmark the link and support us every time you shop!

SEPTEMBER QUICK CHECK CALENDAR *

SUNDAY	MONDAY	TUESDAY	WEDNESDAY	THURSDAY	FRIDAY	SATURDAY
		1	2 DLARC Net (N3SQD)	3 DLARC MEETING 7:30 PM	4	5
6	7 LABOR DAY	8	9 DLARC Net (N3WR)	10	11 Patriot's Day	12
13	14	15	16 DLARC Net (K3PDL)	17	18 Rosh Hashanah Begins	19
20	21	22 DLARC BOARD MEETING	23 DLARC Net (W3NAM)	24	25	26
27	28 YOM KIPPUR	29	30 DLARC Net (ND3JJ)			

Silent Key

The D.L.A.R.C. Wishes to honor and to express its sadness at the passing of a club member or former club member.

MAURICE HELLER / KC3AVX

SEPTEMBER CONTESTING AT THE OK CORRAL

September 5 & 6 – All ASIAN DX Contest – Phone
– RSGB 80 Mtr Autumn Series - Contest - SSB
September 12 & 13 – ARRL EME Contest
– Russian Cup Digital Contest
September 19 & 20 – N.J. QSO Party
– Run For The Bacon QRP Contest
September 26 & 27 – CQ WW DX Contest - RTTY
- AGCW VHF / UHF Contest

.

AUGUST MEETING MINUTES

A General Meeting of the Delaware-Lehigh Amateur Radio Club was held on august 6, 2020 via a Zoom video-conference. Vice-President Steve Harper / W3NAM called the meeting to order at 7:18 p.m. with 34 members online.

President's Report: Steve opened the meeting by asking Steve / NS3L for a recap of the scoring for Field Day. Steve / NS3L related the following: ARRL/RAC Section: EPA

Class: 2A
Participants: 10 Club/Group
Power Source(s): Generator
Power Multiplier: 2X
Preliminary Total Score: 1,780

Bonus Points:

Bonus Points Status
100% emergency power 200
Media publicity 100 Documented by Media Publicity
Public location 100
Public information table 100 Documented by Public Information Table Photo.PNG
Social media 100
Satellite QSO 100
Entry submitted via web 50
Total bonus points 750

Score Summary -

CW Digital Phone Total
Total QSOs 43 130 169
Total Points 86 260 169 515 Claimed Score = (QSO points x power mult) = 1,030

Band/Mode QSO Breakdown:

CW Digital Phone
Band QSOs Pwr(W) QSOs Pwr(W) QSOs Pwr(W)
80m 18 100 74 100
40m 37 100 107 100 12 100
20m 6 100 5 100 79 100club total submitted was 1030 including 350 bonus points.

Steve / W3NAM said the Club is working on a new website that will be based on Wordpress as the present hosting commitment expires in October. Steve said for this year's the PA QSO Party, the Club will participate with members working from home using their own callsign. The member logs will be combined and submitted as W3OK. Steve said The Club is looking for someone to step up to be the next Program Chair as well as a Nominating Chair. John / NT3P said he again would be the Nominating Chair. Dave / N3EYT said he would again be on the committee. John / NT3P asked if the Board has addressed was how a vote would be taken in this virtual environment. John added that if there is a full slate then only the Secretary would have to vote. Steve said the Board has not addressed this topic. Steve announced that QSO Today Virtual Ham Expo could be found August 8-9 at https://www.qsotodayhamexpo.com.

Announcements: None

Secretary's Report: Larry / AB3TY, announced the Minutes for the July 2020 General Meeting. Dean / AB3BD motioned to accept. It was seconded by Adam / KC3OJA and so moved.

Treasurer's Report: Mike / KB3LOD, reported on the Club's financial status for June 2020. Steve / NS3L motioned to accept. It was seconded by Adam / KC3OJA and so moved.

Committee Reports:

Membership: Membership Chair Terry / KC3JHT reported there are currently 152 paid members, 10 associates, and 9 life members. Terry announced one new member Eddie Toro / K3EJT. Eddie is a Technician. Dean / AB3BD motioned to accept. It was seconded by Larry / AB3TY.

Club Station: Steve / NS3L reported no issues.

VE Session: John NT3P said he would check with those who have inquired about testing to find out if they would travel to the site used for Field Day. John added, September would be the earliest that tests would be administered.

Tech Committee: Al / W3CE said the D-STAR 2M repeater had gotten unlinked from reflector 20A. Al asked that anyone who links to another reflector should when finished re-link to reflector 20A.

Website: No Report

Repeater: Barry / N3NVA reported no issues.

Presentation: Barry / N3NVA --- "The W3OK Repeater Systems"

Adjournment: There being no further business, the meeting was adjourned at 7:42 p.m.

WEDNESDAY EVENING DINNER CLUB

Dinner Club on hold due to COVID19 . Listen to the repeater for any updates.

EMMAUS HALLOWEEN PARADE – 2020

The Emmaus Halloween Parade has been canceled for this year, due to the COVID 19 Virus. It joins the ranks of all parades in eastern Pennsylvania, who's management feel that there is too much risk. So be ready fir next years parade.

W3OK CLUB STATION

Better known as the “Milkhouse” the W3OK Station is closed until further notice.. Our repeater 146,700 is always on … So just call W3OK and check.

de Steve / NS3L

NEW MEMBER

The DLARC is continuing to grow, so be sure to greet our new member, shake their hands, and give him a warm welcome to our club. The newest member is Eddie Toro / K3EJT.

ARRL 2020 SIMULATED EMERGENCY TEST (SET) SCHEDULED FOR OCTOBER 3 – 4 WEEKEND

The 2020 ARRL Simulated Emergency Test (SET) will take place October 3 - 4. The annual, nationwide exercise provides Amateur Radio Emergency Service (ARES) volunteers the chance to test personal emergency-operating skills and communication readiness in a simulated emergency deployment. ARRL is asking participants to adhere to Center for Disease Control (CDC) and local health department COVID-19 guidelines by staying home, maintaining safe distances when around people, and following recommended cleaning and disinfecting practices.

ARRL Field Organization leadership at the Section and local levels -- as well as many other volunteers who are active in public service and emergency communication -- are developing emergency scenarios with a variety of agencies and organizations they've partnered with in the past during real emergencies and disasters.

Given the ongoing pandemic, an in-person emergency exercise may not be possible this year, but volunteers are encouraged to adapt to the circumstances. Station and skills readiness are tenets of the Amateur Radio Service. Any time we spend on the air will contribute to developing and practicing our personal radio communication capability. Volunteers with ARES, the National Traffic System (NTS), the Radio Amateur Civil Emergency Service (RACES), SKYWARN™, Community Emergency Response Team (CERT), Salvation Army Team Emergency Radio Network (SATERN), and other allied groups and public service-oriented amateur radio groups are among those eligible to participate in the SET to practice emergency operation plans, nets, and procedures. ARRL has long-standing relationships with several national organizations including the American Red Cross, the National Weather Service, the Federal Emergency Management Agency, and the Salvation Army, among others. This year's SET can be a chance to reach out to these partners -- at a safe distance and/or via online meetings and teleconferences -- to establish or review plans and develop working relationships.

ARRL Field Organization leaders have the option of conducting local or Section-wide SETs on dates other than the October 3 - 4 focal-point weekend, but no later than the end of the calendar year. Contact your local ARRL Emergency Coordinator or Net Manager or ask your Section Manager.

Additional information about the SET and reporting forms are available on the ARRL website.

AUGUST PROGRAM REPORT

the program for the August meeting was the “W3OK Repeater System. Presented by Barry / N3NVA, who maintains the system. The Delaware Lehigh Amateur Radio Club repeater system consists of three individual systems linked together. They are 2 meters, 72 cm and 6 meters. The frequencies are 51.760, 146.700 and 444.900 and with a PL of 151.4 Hz.

Using slides and block diagrams Barry presented the individual elements of the system.

Northampton County as a 300 foot tower in the Nazareth area that is the basis for their communications and allows our antennas also be mounted on the tower the antennas are mounted at the 200 foot level

The repeater elements are also located in the Northampton County EMS site, where they have the advantage of emergency power and also protection. The 2 m section puts out 85 W at the antenna, 72 cm system puts out 65 W at the antenna and the 6 m system puts out 70 W at the antenna. This enables good coverage for the area.

There is also a system of voters which enable communications to be relayed from distances beyond the original system this also enables extended coverage in the Lehigh Valley. There are plans at this time to add more voters which would give us some coverage of the New Jersey. Some of our voters have been deactivated because of conflicts with other systems.

Barry's presentation gave us an inside look of something we may have been taken taken for granted over the years. Also mentioned was the seemingly lack of use by the membership of the repeater. Mentioned were times where it appeared that the only thing heard was the ID. Also some clunking!

Thanks Barry for the timely information and if you missed the presentation you missed and informative event.

PENNSYLVANIA QSO PARTY 2011

October 10th and 11th are the dates for the 2020 PA QSO Party. As in the past the DLARC is hoping to regain its position as the number one club in the state. Now is the time to check your station and antennas, so you are prepared for the party. The Norm Zoltak / K3NZ award for the highest scoring single operator station will be awarded again this year.

The Party sponsors, the PA QSO Party Association are sponsoring party. 2020 rules are available at paqso.org. So it not too early to begin to get ready for the event, check your antennas, and logging systems etc. so you are ready for this event.

MONTHLY BRAIN TEASER

"A special prize awaits the first Club Member to submit the correct answer to this month's Brainteaser to the Pete / NL7XM, *only,* at nl7xm@arrl.net The winner must be present at the next Meeting to receive it, or it goes unrewarded. Officers, Board members, Newsletter staff, and Brain Teaser Authors are not eligible to win."

de Pete / NL7XM



AUGUST BRAINTEASER ANSWER

" 410 "

The winner is **Bill / NC3**



SEPTEMBER BRAINTEASER

Match The Language To The Country Where It Is Officially Spoken

1)	**Persian**	**a)**	**South Africa**
2)	**Punjabi**	**b)**	**Israel**
3)	**Danish**	**c)**	**Uganda**
4)	**Swahili**	**d)**	**India**
5)	**Zulu**	**e)**	**Denmark**
6)	**Welsh**	**f)**	**Iran**
7)	**German**	**g)**	**United Kingdom**
8)	**Hebrew**	**h)**	**Austria**

ALTOIDS USB CHARGER

By Phil Tang

Has your phone or iPod ever died when you needed it the most? That's why I designed a quick little battery charger for your electronics! Just plug your device into its USB port, turn it on, and you're all set! Best yet, it all fits in an Altoids gum tin!

The Design

Lots of electronics are powered from a USB cable, so I figured that a powered USB port would be the most useful power source. I used a voltmeter to measure the voltage on each of the pins on my iPod AC Adapter, and wound up with +5.16V on the V+ pin, +2.06V on the D- pin, and +2.76V on the D+ pin. I'm using a 7805 voltage regulator to get +5V for V+, and using two resistors for each data pin. I calculated the resistor values to minimize current loss (as not much current needs to go to each data pin).

Parts You Will Need

- An Altoids Chewing Gum tin
- A 9V battery (151095)
- A 9V battery clip (109154)
- A 7805 voltage regulator (51262)
- A USB socket (161024)
- A small switch (109171)
- A 22kΩ Resistor (691180)
- Two 27kΩ Resistors (691201)
- A 39kΩ Resistor (691243)
- ~ 2 ft hook-up wire (36792)
- Electrical tape (285464)
- Metal shears (to cut the Altoids tin)

Here's the schematic:

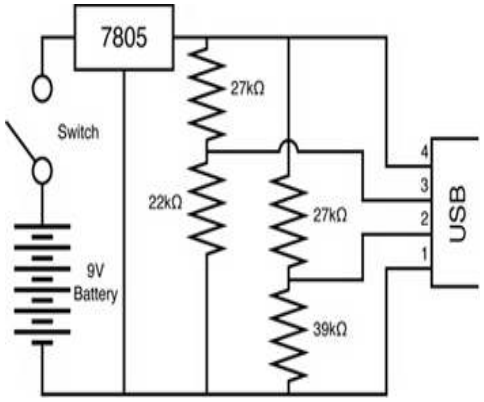

Figure 1. Schematic for the USB Charger

Assembly

For simplicity, I decided to just twist the leads together, as the circuit is pretty simple. You may want to solder them into a prototyping board for durability; see instructions for that below. To twist the leads together, you'll need to solder wires to the switch, the regulator, and the USB socket. Then twist the red lead from the battery with one of the wires on the switch, and twist the other lead from the switch onto the left wire (with the regulator's metal part down) on the voltage regulator. Then, twist the rightmost wire on the regulator with the two 27kΩ resistor and the lead from pin 4 of the USB socket. After that, twist the lead from pin 3 of the USB socket with the other end of one of the 27kΩ resistors and the 22kΩ resistor. Then twist the other end of the second 27kΩ resistor with the lead from pin 2 of the USB socket and one end of the 39kΩ resistor. Finally, twist the lead from pin 1 of the USB socket with the remaining ends of the battery, the regulator, and the 22kΩ and 39kΩ resistors.

You should have a functional mess of twisted wires at this point, so test the circuit by plugging in a device or by using a volt meter. If it doesn't work, check the switch and your wiring. Once it works, wrap each twist with a length of electrical tape. Then cut a USB sized hole in the Altoids tin with the metal shears. You only need to cut down twice, then just bend the metal repeatedly until it snaps. I'd suggest covering the edges with some electrical tape; it can be sharp! Then put the battery in the tin and push the USB socket through the hole. Then, push the rest of the circuit in the remaining space; it should fit pretty

easily.
It looked pretty messy, so I covered up the guts of the device with some electrical tape. And voila! You have a working charger.

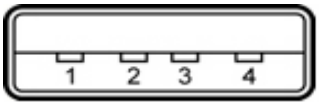

Figure 2. USB Pin out Diagram, looking into the socket.



Figure 3. All The Parts you'll need to build The USB Charger



Figure 4. The Altoids Tin, After Cutting



Figure 5. The Finished Product Opened Up



Figure 6. The Finished Product

If you want, you can put the circuit on a prototyping board; It'll be smaller and It'll look simpler, but It will be a little more complicated to make. It shouldn't be too much of a problem; there are just four resistors and a switch to put in. The USB socket's leads are 0.1" apart and will fit right into a proto board.

iPod is a trademark of Apple Inc. Altoids and the Altoids logo are trademarks of Callard & Bowser Inc.

About the author

Phil Tang is an engineering student at Tufts University and a summer intern at Jameco, working on new media and data integrity. He loves learning a little bit about everything and a lot about the interesting bits. He's a proficient roboticist and all-around computer guy, enjoying all kinds of electronic marvels. He can be reached at phil.sj.tang@gmail.com.

(Reprinted with permission from the author, exclusively for *The W3OK Corral*.)

AMSAT-DL SUBMITS LUNAR LANDER PROPOSAL TO EUROPEAN SPACE AGENCY

Germany's amateur satellite organization AMSAT-DL has submitted a comprehensive proposal to the European Space Agency (ESA) for its Lunar Amateur Radio Transponder (LunART) lunar lander -- a communications platform on the Large European Lander to support communication and payload experiments. AMSAT-DL's Peter Guelzow, DB2OS, and Matthias Bopp, DD1US, say that a LunART (called "LunaART" in the AMSAT-DL proposal) would support direct communication with Earth via amateur radio, support university and student payloads and offer direct access to their experiments, and expand the reach of radio science. It could also provide backup communication capability and capacity during an emergency, or when the ESA network is busy.

The comprehensive radio platform would use the European frequency protocol of 2.4 GHz up and 10.45 GHz down (approximately 100 W), pioneered in the QO-100, the first geosynchronous amateur radio payload. The platform would also include a VHF/UHF transponder. AMSAT-DL would develop and build the necessary hardware and software and provide ground station support via the 20-meter dish at AMSAT-DL headquarters in Bochum, Germany. They envision developing a smaller ground station with an approximately 1-meter dish to support groups, including schools and universities. Low-power beacons would transmit on various frequencies from VHF (145 MHz) through SHF (up to 24 GHz or even 47 GHz), AMSAT-DL's proposal says.

"This transponder would also be an ideal platform to develop new transmission schemes with novel modulation and coding techniques optimized for long-distance communications with the corresponding high latency (long delays)," AMSAT-DL said. "This would provide essential knowledge in preparation of a future Mars mission." In addition, LunART could include the capability to transmit still or slow-scan television images and video to schools "from cameras attached to the lander monitoring the moon surface and perhaps the Earth in the background [which] would be ideal stimuli for getting school kids and STEM organizations further interested in space."

The proposal is on open access at the ESA website and is now being evaluated. AMSAT-DL's LunART follows the Lunar Amateur Radio Interaction Experiment (LARIE) proposal from Andy Thomas, G0SFJ. Both refer to weak signal modes and suggest the same frequency bands. Thomas said he welcomes LunART as a well-developed proposal and hopes ESA will support it as well. -- *Thanks to* Southgate Amateur Radio News

REFLECTIONS FROM THE PAST



2010

BEN / N3WR presenting a program on Tracking and Resolving RFI

DXCC ENTITIES IN PLAY AS US REJECTS CHINA'S SIGNIFICANT SOUTH SEA CLAIMS

To radio amateurs, Scarborough Reef or the Spratly Islands are DX locations, occasionally activated to provide needy DXers with "a new one." The Spratlys are #53 on the Club Log DXCC Most-Wanted List, but Scarborough Reef -- a much more difficult piece of real estate to access -- is #4. These South China Sea Islands are once again in the news, as the US has begun putting heat on China by rejecting nearly all of its significant land claims in the region. Secretary of State Mike Pompeo this week said that the US now regards virtually all Chinese maritime claims outside of its internationally recognized waters to be illegitimate.

"The world will not allow Beijing to treat the South China Sea as its maritime empire," Pompeo said. "America stands with our Southeast Asian allies and partners in protecting their sovereign rights to offshore resources, consistent with their rights and obligations under international law. We stand with the international community in defense of freedom of the seas and respect for sovereignty and reject any push to impose 'might makes right' in the South China Sea or the wider region."

A 2016 ruling from an international tribunal discounted China's claims with respect to Scarborough Reef -- also known as Scarborough Shoal -- and the Spratlys, but it did not rule on the matter of sovereignty. In addition to China's claim,

Malaysia, Taiwan, Vietnam, and the Philippines have asserted ownership of the Spratlys. Scarborough Reef is claimed by China, the Philippines, and Taiwan. The Permanent Court of Arbitration in the Hague ruled in favor of the Philippines in a dispute with China over Scarborough Reef. The tribunal said that although navigators and fishermen from China and other states have historically made use of South China Sea Islands, there was no evidence that China had historically exercised exclusive
control over the waters or resources. The tribunal said China had violated the Philippines' sovereign rights and had caused "severe harm to the coral reef environment" by building artificial islands and an air strip.

In 2015, a Chinese naval vessel "harassed a Philippine Air Force patrol flight in the Spratlys," one news account reported, by firing an illumination round. The incident postponed a Philippine Navy flight that was to evacuate an ailing participant of the then-just-ended DX0P DXpedition. The Chinese Navy has also warned off private aircraft. DX0P was issued by the Philippines. Last week, China complained about the US conducting joint exercises with two US aircraft carrier groups in the region.

A May 2007 DXpedition to Scarborough Reef used the call sign BS7H, granted by China. DXpedition team members operated from wooden platforms mounted atop each of the reef's four rocks that were exposed during high tide. The ARRL Board of Directors voted in 1996 to add Scarborough Reef to the ARRL DXCC List.

HIGHSCHOOL MARINE BUOY TRANSMITTER NOW ACTIVE ON 20-METER WSPR

Phil Karn, KA9Q; Randy Standke, KQ6RS, and members of the Mount Carmel High School Amateur Radio Club (MCHSARC) in San Diego have constructed and deployed an amateur radio marine buoy in the Pacific. The buoy, which transmits *WSPR* on 14.0956 MHz USB, has already been heard around the continental US, Brazil, Hawaii, Japan, Costa Rica, Australia, and South Africa.

"Over the past year, Randy and I have mentored the MCHSARC in designing and constructing a simple marine buoy that was deployed from the RV *Sally Ride* [on July 16], about 700 kilometers off the coast of southern California," Karn said in a post on the AMSAT Bulletin Board. "It is up and transmitting *WSPR* on 20 meters using the call sign KQ6RS, and is being received all over the US and into Canada and Brazil." Karn is blogging about the project with updates.

The electronics are the 20-meter *WSPR* version of the WB8ELK "pico tracker" that has been flown on long-duration balloons. "We removed the solar panels and substituted 21 ordinary alkaline D cells, wired to supply 4.5 V," Karn explained. "We estimate battery lifetime will be 6 months."

Karn said that the project made use of everyday hardware. The buoy -- essentially a spar buoy -- was constructed using a 5-foot section of 4-inch PVC pipe, with sufficient ballast in one end of the pipe to permit it to float vertically in the water. The top is closed using a sewer pressure test plug, which has a bolt in the center that acts as a convenient feed-through and antenna mounting point. The antenna is a stainless-steel CB whip with a matching network.

"We use the sea as a counterpoise, but to avoid direct metal/sea water contact, we lined the inside of the pipe with copper tape to form a capacitive connection," Karn said.
During initial floatation testing, the project team found that the ballasted pipe alone was remarkably stable in pitch, roll, sway, and surge, but oscillated a lot in heave -- i.e., up and down movement. Cross arms were at the water line to add drag in the vertical direction, to counter the issue. Because sea water was required to tune the antenna, Standke floated the buoy off a dock in Mission Bay.

"We tried to make this thing as rugged as we could," Karn recounted, offering his favorite saying to the students: "The sea always wins in the end, but we can delay that long enough to be useful."

Deployment was to be from a NOAA vessel in April, but the trip was canceled due to the COVID-19 pandemic. Standke secured a trip on the RV *Sally Ride*, a research vessel operated by Scripps Institute of Oceanography.

The first reception report was on July 16 at 12:52:30 UTC from grid square CL89eu, although the current carried the buoy east I to CL89fu at 20:32:30 UTC. The buoy (KQ6RS-1) can be tracked on the APRS and WSPR Net sites.
Karn said the project team is already planning its second buoy, which may include two-way links, satellite tracking, and sensors

THE DLARCforum

A few years ago the Executive Committee established an electronic mailing list for D.L.A.R.C. Members and friends to provide an easy way to disseminate information on a timely basis. This mailing list is called the “DLARCforum” and all club members with email capability are welcome to join.

Joining the list is easy, just go to this website :http://mailman.qth/mailman/listinfo/dlarcforum and fill in the appropriate boxes. Instructions for the subscription process are available on the page. If you don't have internet service, but do have email service you can still subscribe by sending a subscription request directly to the list administrator, ka3jwe@arrl.net.

The DLARCforum is a “closed” list which means only subscribers can post messages, so your mailbox won't be filled with junk mail from unknown sources. The list uses a “text only” format which means, that only messages in plain text are passed. Messages received in HTML are filtered and stripped of any formatting before being sent out to list subscribers. The list will not accept or pass attachments such as files and pictures. This is done to eliminate the possibility of spreading any type of computer virus or other harmful programs. The forum is an “un-moderated” list, which means that there is no moderator screening messages before they are passed on.

Since its beginning, the volume of messages on the DLARCforum has been relatively low compared to other similar mailing lists. So don't worry your your inbox won't be overflowing with messages if you subscribe. There is also the ability to configure your preferences for the list to your personal liking. So, please consider joining the list if you're not already subscribed. You'll be better informed about current club activities and also have the knowledge and experience of over half the membership at you disposal. Anything you want to know, all you have to do is ask! de **Don / KA3JWE** List Administrator

F.Y.I.

The September Program will be **"Elections & Awards" – Terry / KC3JHT**

The D.L.A.R.C. meets the "FIRST" Thursday of each month. Membership, friends and interested persons meet at the Bethlehem Township Community Center, 2900 Farmersville Road, Bethlehem, Pa. 18020 at 7:30 PM. Committee reports and announcements of all present and future activities will be presented at that time. Followed by that month's program.

NORTHAMPTON COUNTY ARES, RACES AND DLARC NET

All Radio Amateurs are welcome to participate in the ARES, RACES and DLARC net. This net meets Wednesday at 1900 hours local time, on the W3OK Repeater 51.76, 146.70 and 444.90 (pl 151.4). With an alternate frequency of 147.350 (DCS 315) W3OI Repeater.

QCWA Chapter 17 holds a net Monday evenings at 8:30 PM on 3960 +/- depending on conditions. Other inputs are the 146.85 repeater, (151.4 PL) and Echolink at K2PM-R.

Mid-Atlantic D-Star Net meets each Tuesday at 7:30 PM. The following repeaters Dstar repeaters are available in the Lehigh Valley. W3OK -145.11000MHz -0.600 Port C – W3OI -147.16500MHz +0.600 Port C, – W3OI - 445.02500MHz -5.000 Port B All repeaters on the net are linked through **Reflector 020 port A**, so all stations checking into the net should make sure that they have *their local repeater call sign followed by the letter "G" in the eight position of the RPT2 field***.** Otherwise, you will only be heard locally and not over the Reflector. Dongle users wishing to check into the net should Log On by connecting directly to Reflector 20, port A, rather than through your local repeater in order to conserve local bandwidth.

The OK Corral is an organization publication for the purpose of informing members of the D.L.A.R.C. of educational and training opportunities, club events, relevant news articles and a monthly calendar of daily activities, meetings and dates.

EXECUTIVE COMMITTEE 2019 – 2020

OFFICERS

President – Stephanie Koles / WX3K ---------- president@dlarc.org
Vice President – Steve Harper / W3NAM ---------- vicepresident@dlarc.org
Secretary – Larry Kaplan / AB3TY ---------- secretary@dlarc.org
Treasurer – Mike Gower / KB3LOD ----------treasurer@dlarc.org

BOARD of DIRECTORS

Gabe Lantos / KZ2A ---------- gpl-3639@gmail.com
Dean Guth / AB3BD ----------babydean1@hotmail.com
Les Morrow / W3LES ---------- lesterf52@gmail.com
Bill Connelly / W3MJ ---------- cqw3mj@gmail.com
Steve Nordahl / NS3L ---------- ns3l@yahoo.com

PHONE NUMBERS FOR THE EXECUTIVE COMMITTEE OF THE DLARC CAN BE FOUND ON THE WEBSITE / MEMBERSHIP LISTING

CLUB MEETINGS

All regular meetings of the D.L.A.R.C. Are held on the first Thursday of each month at 7:30 PM at the Bethlehem Township Community Center
TALK IN ON 146.700 (PL 151.4)

Club Station Telephone Number – 484 291-1527 Email Address – w3ok146700@gmail.com

THE W3OK TRUSTEE --- Barry Vogt / N3NVA

The W3OK Corral is published monthly and is the Official Publication of the

DELAWARE LEHIGH AMATEUR RADIO CLUB INC.
14 Gracedale Avenue
Nazareth, Pa. 18064-9211

THE NEWSLETTER STAFF

Editor – Don Holmes / KC3II ---------- editor@dlarc.org
Web Master – Rich Hurd / WC3T ---------- rich@wc3t.us
Circulation – Larry Kaplan / AB3TY---------- lkdds@ptd.net
Photographer – Dave Blankenship / N3EYT ---------- n3eyt@arrl.net