DELAWARE-LEHIGH AMATEUR RADIO CLUB, INC. W3OK

September 1991

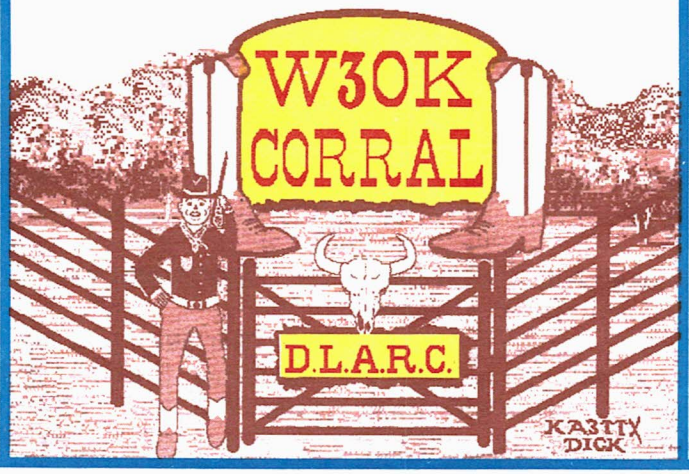

SPECIAL SERVICE CLUB
ARRL Affiliated Club

ARE YOU AT RISK?

==========

HOW IS YOUR INSURANCE?

by Bill, K3ANS

DLARC program Chairman

You and your family are at the local shopping mall. You return from the store only to find that your car had been broken into and your brand new two meter rig is gone. You notify the police and course your insurance agent. Will your insurance cover this loss? If it does, how much of it will be covered and which policy will cover it. A severe wind storm pass through the area. The storm knocks down your tower causing damage to your property and destroying your antennas. Again, what will be covered and how much will you expect to receive from your insurance company.

INSURING YOUR EQUIPMENT will be the program at the DLARC meeting on September 3rd to be held at the Northampton Auditorium at Northampton Community College. Note change from Kiva Hall.

The program will be presented by John Lasher, N3GLZ who will not there to sell insurance, but to help make our choices. His background in the insurance business, includes District Sales Manager for Erie Insurance Group in Bethlehem, a former claims adjuster and a member of various professional organizations.

John is a very active amateur operator and is a member of the Dauberville DX Association in Reading. He commutes almost daily to his office in Bethlehem.

****

CLUB MEETING SEPTEMBER 5th

NORTHAMPTON AUDITORIUM NORTHAMPTON COUNTY COMMUNITY COLLEGE 7:30

NOVICE/TECH CLASSES TO START SEPTEMBER 16th

by Daryl, KU3L

Entry level classes will begin on September 16th. Classes will be held in the Greystone Building at the Gracedale Complex near Nazareth from 7 to 9 PM. Those interested in either code and codeless licenses are welcome. Traditional novice license tests will be given during class sessions.

A book order will be taken at the first class session. However, for those who want to get started early we will be teaching from the new ARRL publication "Now You're Talking". The FCC Rule book published by the ARRL is highly recommended. For those wanting code instruction we highly recommend the ARRL cassettes "Your Introduction to Morse Code".

Please pass the word. Interested persons should call the DLARC phone bulletin board at 215-820-9110 and leave their name, address, and brief message to obtain an information packet. de Chris, NU3L

****

NOMINATIONS FOR OFFICE THIS MEETING

by Bill, W3FYK chairman nominating committee

The nominating committee consisting of W3FYK Bill Werner; NC3P, Bill Fahs; and Bud Fritz, WA3BOM have presented the following as officers for the comming year. Elections will be held at the October meeting. Nominations will only be opened at the September meeting. PRESIDENT, WA3T; V-P, WF3H; SECRETARY, N3EYT; TREASURER, KA3MOU; Board members: BILL, K3ANS; CLARENCE, W3PYF; NORM, N3GXW; BUD, WA3BOM; KU3K, BOB and retiring president, W3TDF who automatically becomes a board member.

CONCRETE DEMOLITION
by Ray, W3TDF

Do you have a concrete tower base that you want to get rid of? Or, how about a thick concrete wall, or an abutment? Maybe you are getting ready to put in a big block of concrete, for a tower base, or whatever, and have the idea that you might want to remove it before putting the ranch on the market at some future date!

Thanks to Harlan, N3IUW, who provided the following information, (but was unwilling to write it up), I'll do my best to present this interesting concept.

There is a product on the market called S-MITE. It is a dry powder that is to be mixed with water to make a slurry, then poured into holes in concrete. Then 10 to 20 hours later the concrete is all cracked up. The S-MITE hardens, then expands with the force of 4000 PSI (pounds per square inch). No explosion, no broken or rattling windows, or upset neighbors. It just quietly does its thing while you are sleeping, or at work!

If the concrete is already there, then you have to drill the holes and pour in the slurry. If you are putting in a new base (or ?), you install 1-1/2 inch thin wall conduit, or plastic pipes, extending through the form, with a cap on the exposed part, then later you remove the caps, pour in the slurry, and go do something else while waiting for it to do its thing!

What's the stuff cost? Well it isn't cheap, but its less expensive than any other method of doing the job. One container of the powder is enough to fill about 30 feet of 1-1/2 inch pipe, or drilled holes, and costs about $195. 10 or more containers is #175 each.

Information is available from GEOTECH SERVICES, INC., 70 VALE RD. BROOKFIELD, CT 06804. Phone 800-633-4436.

<S-MITE is a Reg. Trademark of SUMITOMO CEMENT CO., LTD>

WHEN YOU JOIN THE ARRL OR RENEW YOUR MEMBERSHIP BE SURE TO SEND YOU MONEY TO TREASURER, KA3MOU, THE CLUB BENEFITS FROM THIS. REMEMBER, JOINING ARRL IS NOT JUST A MAGAZINE SUBSCRIPTION!

FUTURE SHOCK!
prepared and conceived by Jerry/W3BRZ
APR. 1,2001

NEW OPERATORS LICENSE ANNOUNCED TODAY!

The ARRL and FCC have announced that a new Amateur License will be available this summer.The new "Operators Class" license will replace the existing Extra, Advanced, General,Technician,and Novice class license.No code will be required or necessary under the new license,and further, since knowledge of electronics has been found to be old fashioned,and antiquated,no written exam will be given.This is in complete agreement with the League, whose Board of Directors, at last month's meeting,rendered an agreement,stating that the present written exam, consisting of ten true or false questions,was much too difficult for the average Ham-to-be!

FCC has also announced that this new license will help to increase the Amateur ranks from its present all time low of 5.5 million and to promote more intelligent Technicians and Engineers from the Amateur Radio community.

The new Operators License will be packaged with each "new" amateur transceiver and will contain a number/letter group that will be suitable for a call-sign. Those amateurs already licensed, will be "grandfathered" in, and required to use the letter group,K or W, followed by their Zip code, to represent their call-signs. It is hoped that this new move by the Commission and ARRL will increase the number of amateurs to overflowing, and allow each American citizen a "fair" chance to become a Ham.

Further information will be in the annual issue of QST/2001

P.S. Sources at Headquarters have learn that the Commission is planning a medical exemption for all those unable to fill out their new form!

Is it humor or a vision of things to come??

by Jerry/W3BRZ

I found the above story on one of the Packet Bulletin Boards and I guess I should have held it for the July issue, but it was too good to hold. Hope you enjoy it as much as I did.
de Clarence W3PYF, editor

++ CONTEST CALENDAR ++

by Barry, KU3X

Sep. 7	North American Sprint, CW
Sep. 7-8	Bulgarian DX Contest
	All Asian DX Contest
	European DX Contest
Sep. 14	North American Sprint
Sep. 14-15	Worked All Europe SSB
	All Asian SSB Contest
Sep. 14-16	ARRL September VHF QSO Party
Sep. 21-22	ARRL 10 Ghz Cumulative contest
	Washington State QSO Party
	Scandinavian CW Contest
Sep. 25	W1AW Qualifying Run 10-60 WPM Sep.
28-29	Scandinavian SSB Contest
	CQ WW RTTY Contest
	Idaho State QSO Party

I hear W3TDF on the repeater getting ready for the Pa. QSO Party. Looks like he wants to take first place again. Washington and Idaho both have their QSO Parties this month so better get in there and practice.

I see that there are a lot of DX contests this month. Don't be afraid to get in there and spread your wings and fly. As I have said in the past, you don't need big antennas and 1500 watts to get in these contests to have fun. There are people winning awards by running only five watts output power for the QRP class.

de Barry KU3X

RED CROSS SAYS THANKS

by Clarence, W3PYF

The following is the text of a letter I received from the Lehigh Valley Red Cross.

Dear Clarence:

On behalf of the Board of Directors of the Lehigh Valley Chapter of the American Red Cross and Lehigh Valley Pride, Inc. I extend our sincerest thanks to the ***Delaware-Lehigh Amateur Radio Club*** *for their participation in Summer Splash '91. Your assistance was invaluable.*



In several cases the provision of emergency communications via radio indeed was the key to quick and effective action by volunteers coordinating our efforts. Both the Derriere in the Delaware and the Lehigh River Relay Run were enhanced by the participation of the Radio Club.

On a more personal note, I extend an extra note of thanks to Adrienne, KA3YEB, at the third exchange point of the Relay Race for her quick action in what could have been a disastrous situation.

Again, our sincere appreciation for your efforts. We look forward to working with your group again during Summer Splash '92.

Sincerely,

Karen A. Glose
Coordinator
Community Marketing.

WE WERE THERE!

We did it again. With 34 members of the DLARC on the job on Sunday July 27th, the coverage on the DID and Summer Splash was a great job.

The raves shown by the Red Cross, were echoed by the many safety services on and off the river. We once again, proved that regardless of what is needed, if it involves communications, we can do it.

The letter above, says it all.

de Clarence W3PYF

EASTON HOSPITAL RUN

On Sunday, August 4th, 8 members covered the safety watch for the Easton Hospital Run. Once again, out expertise in communications was great.. We had 7 members ready, when a change in plans came about and Barbara, KA3VGI turned up to watch husband, WG3C in the race and was put to work. Others participating were NOKIA, KB3RI, W3PYF, N3FEA, KB2ANG, N2MWQ and N3FEA. Thanks to all who participated.

In the case of one racer, Barbara made a call for one of the participants and the ambulance that was on duty, picked up the fallen racer and transported to the hospital.

de Clarence W3PYF

PROVERBS

By Rafael...HI8RMQ

Hello. Memorize and study the proverbs given below. Try to use then in your daily conversations...tnx..

LOOK BEFORE YOU LEAP

This means that you cannot talk about packet radio in a party with girls without first considering the possible results.

BUSINESS BEFORE PLEASURE

This means that you must attend your work before you make packet radio.

NO GAINS WITHOUT PAINS

This means that you cannot have success in 10m packet radio without working hard for it.

OUT OF SIGHT OUT OF MIND

If you don't hear a dx station, boy, don't try it...

NEVER JUDGE BY APPEARANCES

If you see a 9db dx station, it doesn't means that condx is open, perhaps is some guy testing his new 2kw Henry linear amp.

A STITCH IN TIME SAVES NINE

This means that if you check immediately your ant. with 3 swr, you could save your 440.

JACK OF ALL TRADES, BUT MASTER OF NONE

This means that is better to know packet radio perfectly, than trying to know voice, rtty, amtor, oscar sats, packet, cw, sstv bla,bla,bla.

BIRDS OF A FEATHER FLOCK TOGETHER

You can see packet fellas together in field days, hamfest....

NEVER COUNT YOUR CHICKENS, BEFORE THEY ARE HATCHED

This means that you cannot tell your friends that your new experimental antenna will work fine if you have not tested it.

NECESSITY IS THE MOTHER OF INVENTION

That's why new antennas appears, and 11m are converted to 10m.

A NEW BROOM SWEEPS CLEAN

This means that your linear amplifier will work better with new tubes.

ROME WAS NOT BUILT IN A DAY

This means that you should not expect to learn all packet details in a day

EVERY CLOUD HAS A SILVER LINING

This means that you should not worry after your radio blew up, now you know that that antenna has the wrong measures.

NO ROSES WITHOUT THORNS

This means that even you're hearing a dx stations well, probably you have to work hard to connect it.

STRIKE WHILE THE IRON IS HOT

This means that it is better to make packets contacts while condxs are open.

...That's all for now.Soon 'Famous saying'...

73! Rafael...HI8RMQ

GREETINGS TO ALL QCWA MEMBERS & INTERESTED ONLOOKERS

Thanks to Alex, VE7AKV

I recently acquired a copy of the 1958 ARRL Handbook that I was looking for. I looked through the back section of the book at the catalogue that was printed way back then. I then thought of the big bucks we spend on new gear nowadays and would like to share what I found:

Johnson Viking "Adventurer" 50 Watt Transmitter...	$ 54.95
Navigator" Transmitter/Exciter.....	149.50
"Ranger" Transmitter.....	229.50
"Valiant" Transmitter.....	349.50
Pacemaker" Transmitter.....	495.00
Heathkit DX-20 50 Watt CW Transmitter.....	35.95
DX-100 Transmitter.....	189.50
DX-40 Transmitter.....	64.95
Vibroplex Bug (24K Gold Plated Base).....	29.95
Globe Chief 90 Transmitter Kit.....	59.95
Globe Scout 680 Transmitter.....	119.95
Globe King 500B Transmitter.....	795.00
Mosley TA-33 Tri-Bander Beam.....	99.75
Gonset Communicator III.....	269.50
Hammarlund HQ-100 General Coverage Receiver...	169.00
HQ-110 Amateur Receiver.....	229.00
Hy-Gain 3 element 20 meter beam.....	49.95
3 element 15 meter beam.....	29,95
3 element 10 meter beam.....	19.95
Membership in ARRL with QST Magazine.....	$ 4.00 per Year

BRING BACK ANY MEMORIES?

==========

VE TESTING AUGUST

by Robin, WA3T

At the August 2nd session at Gracedale, 9 candidates took a total of 18 elements. There were three upgrades, one new Novice, two new Technicians, and one new Technician "plus". These included: David Vogel, N3JGX, Extra.
Alfred Antonelli, N3KCO, General;
John M Corcoran, KA3ZGG, Technician;
John Rogovic, new Technician with code;
Timothy A Nibbe, new Technician;
Ronald N Cluck, new Technician;
Jeffry S Frantz, Novice;
VE's at this session were Chuck, NE3K; Eddie, W3APE; John, K3GQJ; Ray, W3TDF, and Robin, WA3T. The session for September 6th will have team 1 in attendance.

de Robin, WA3T Team Laison Alternate.

Meeting Minutes
by Chris, NU3L

The meeting of the Delaware Lehigh Amateur Radio Club was called to order by the president, W3TDF at 7:30 PM on August 1, 1991. The meeting was attended by 71 members and guests. 1. The treasurers report was read by Dick, KA3MOU. motion to accept the report was made by W3PYF, seconded by K3CP and passed unanimously. 2. A motion to accept the minutes of the July meeting as written in the W3OK Corral Newsletter was made by N3GWR, seconded by K9TBD, and passed unanimously. 3. KA3YBX, Andy Dudisch was elected into the club and KB3TS, Laing Batchler was reinstated to active member status. 4. The August club newsletter was mailed using the bulk rate for the first time. Members in the Phillipsburg, NJ area had not received their copies by meeting time. Future bulk mailing will be done earlier. If this does not work some or all mailings will be by traditional. postage. 5. W3XM wan the 50/50 drawing. 6. W3FYK and NC3P have been appointed to the nominating committee; W3TDF will make one more appointment so nominations can be presented at the next regular meeting. 7. Publicity chairman, K3MWN will send to the ARRL for publication in QST the announcement for the Christmas City special event station which will be operated on Saturday and Sunday, December 21 and 22, 1991. 8. KD3IZ has donated a 30 foot tower to the DLARC because he is moving to Atlanta and will not be permitted to erect a tower. Thanks Tim! 9. The technical committee reported that the 145.11 repeater now has improved receive sensitivity. Educational committee reported that entry level classes will commence on September 16. This announcement will be sent to the local newspapers and cable bulletin boards by K3MWN, publicity chairman. There were no reports from the following committees: station trustee, awards, VE program, and constitution and bylaws. 10. N3IGA is coordinating the DLARC picnic which will be held on August 18 in Hacketts Park. Please notify John of which type of dish you will be providing. Of course the club provides main dish and beverages. W3TDF expects to donate corn if it ripens on time. 11. K3NWM has prepared a draft of operating protocol for use of W3OK repeater. This will be reviewed at the next board meeting prior to distribution. KU3X suggested that a very aggressive approach to distribution of these operating procedures be taken, perhaps via direct mailing. Recent abuse of the time function on the 146.70 W3OK repeater prompted a motion by W3PYF which was seconded by N3IGA to eliminated the time function from the repeater. After discussion which mainly centered around allowing the actions of a few to dictate club policy, the motion was withdrawn. WA3T suggested that time and date stamping be made a part of the regular 10 minute ID but that manual access be removed. At a minimum it was agreed to try to remove it from the phone patch ID immediately. W3TDF will contact the technical committee to determine if this can be done. 12. K9TBD suggested that club activities be reported regularly in the local newspapers. The newsletter currently is sent to the Morning Call. After some discussion on what should be done K9TBD initiated and K3VEM seconded a motion to have the publicity chairman contact the media regarding publication of club meetings and other events. K3NWM will contact the various community calendar editors. 13. The DLARC had the biggest contingent at the Derriere in the Delaware. Thanks to all who participated and helped with communications. 14. A motion to adjourn was made by W3PYF and seconded by K3CP. The motion was passed unanimously and the meeting adjourned at approximately 8:15 PM. 15. K2JF, John Fisher gave a technical yet very understandable presentation on solar activity and how it relates to HF propagation.

Respectfully submitted by Chris, NU3L

****

ARRL DX CHECKING

Field checking of QSLs reached 45 percent for the more than 2000 Worked All States awards and endorsements processed in 1990. This is a 10 percent increase over 1989. To support this increase in activity, 43 new Special Service Club HF and VHF awards managers were appointed in 1990.

Worked All Continents was the most popular award in 1990, with 3000 awards and endorsements issued. Diamond Jubilee awards numbered 600; VHF-UHF Century Club, 400; code proficiency, 400; Old Timers Club and Long-Term Membership Awards, 350. Five-band Worked All States plaques were awarded to 52 hams. Maximum processing time for awards at year's end was 5 weeks.

de ARRL Newsletter

HERE COMES IMA

MORE ON SINE WAVES

by Van K3CP

Elmer greeted Ima Lidd, "Hi Ima, do you remember where we left off at our last meeting?"

"Hi, Elmer. Yes, I do. We were talking about sine waves and harmonics but you didn't tell me how harmonics were generated. How do you create them and do they have any use to ham operators?"

"Yes, they have some applications for hams some good and some not so good. Let me tell you about fidelity. If you apply a signal to an electronic circuit, amplifier, speech processor or any other, you do so for a reason. If the wave comes out with the same shape as when it went in, the circuit in question is said to be one of high fidelity (Hi Fi). This is the kind of circuit you would design for a high fidelity amplifier for music play back. You would test the fidelity of this amplifier by applying tones to its input and by using an oscilloscope to observe them at its output. For instance, suppose we started with a 200 Hz. signal. We would need a good audio oscillator to insure that we had a good sine wave. We would now measure the output. It should still be a 200 Hz. sine wave, but with greater amplitude. Next we would tune the audio oscillator to 500 Hz., then to 1000, 1500 and so on. In a properly designed circuit, the amplitude of the output would not vary by more than a few DB's across the entire audio spectrum. An amplifier that produced lower gain at the high frequencies would be said to have poor high frequency response. Any variation in wave form from the original shape of the sine wave is called distortion.

"Ima, let me correct a popular misconception. Distortion is not caused by an impedance mismatch. If you used a low impedance mike with a high impedance circuit or 8 ohm speaker on a high impedance amplifier, you would not cause distortion. Most of us have a mismatched antenna, that is, the antenna does not match the feed line, but this doesn't cause distortion. The only harm in the mismatch is in power transfer. The only way you can cause distortion is to alter the wave shape, other than its amplitude, by using a non linear device or circuit for instance.

Ima responded, "I never knew that. I was told that a mismatch would cause distortion. I even heard it on the ham bands." Elmer continued, "We will talk about reports and other things you hear on the ham bands in another talk. There's some pretty wild information out there. Hi.

"I said earlier that harmonics are good things for us sometimes. Well, they are. Suppose we wanted to double a 7 Mhz. oscillator to operate on the 14 Mhz. band. We could take the output of that oscillator and feed it to a stage known as a frequency doubler. A doubler is circuit that is configured in such a way as to be rich in harmonics."

"I see", said Ima, "but how do you select the harmonic that you want, Elmer?"

"That's a very good question. The doubler stage's input is tuned to 7 Mhz. - to get a good match for maximum power transfer. The frequency doubler's output circuit would be designed to resonate at 14 Mhz. If you tuned the output to 21 Mhz., the circuit would be a frequency tripler. The more multiplying that you do reduces the output level. That is a common problem and can be cured by adding a straight through amplifier". Ima interrupted, "Well if you can use the output circuit to pick which harmonic you want, then you could use it to reject unwanted harmonics."

"Very good, Ima, said Elmer, "that's exactly right. That's how we make filters, high pass, low pass, band pass and so on. One of the most common forms of filters consists of fixed components. They are either inductors or capacitors that are arranged in various configurations. The L network is a filter in which the inductors are hooked up in the shape of the letter L. Do you know of any others?"

"Yes", responded Ima, "the T network has the coils and capacitors in the form of the letter T. I've heard about a pie filter, but I don't know what that is, Elmer." "I guess nobody else does either," laughed Elmer. "That's pi network and it's shaped like the symbol PI that is used in mathematics. This is a good place to stop. We will continue our talks next month if you'd like."

"Yes indeed, Elmer, and thank you. I would like to talk more about filters and their uses. See you then."

de Van, K3CP

DIGITAL COMMUNICATIONS
Keying Your Transmitter
by Joel, K9TBD

The purpose of this article is two fold. The first is to describe a little keying circuit for your transmitter and the second is to explain how the circuit diagram got into the newsletter.

Twenty years ago I built one of the first Morse Code keyboards from an article that Jim (W9TO) and Bill (W4UX) described in QST. I needed to update the keying circuit for my newly acquired Kenwood TS440. The circuit has two different (switch selectable) methods for keying. The relay will key any rig (but is noisy) so the output transistor may be used directly for (+) keying rigs. When the switch is in the up position the relay contacts (CR1A) key the output, whereas, when the switch is down, transistor (Q2) keys the output.

The diode D2 functions as an "oops I got the leads backwards". If you get the hot and ground wires backwards your transmitter will be keyed continuously.

The diode shunting the relay (CR1) acts as a quench to kill the relay kick to you don't burn out the driver transistor (Q2). Since there are two transistors in a row, the output follows the input in that when the input is grounded then so is the output. The relay draws about 40ma and operates up to 70 WPM with no problem. The lowest current drain DIP relay that I could find at a local supply house drew 75 ma and though it worked I opted for less current. This also determines how much saturation current is required for the last transistor (Q2). The transistors can be replaced by any modern NPN such as 2N2222A's which are readily available.

When keying an arbitrary transmitter with the switch in the down position, you may key your transmitter without doing anything since many key circuits will trigger with just micro-amps. To remedy this situation either use the relay (which has many meg-Ohm isolation) or replace the output transistor (Q2) with a very low leakage device or an FET.

TRANSMITTING GRAPHICS BY PACKET RADIO

There are many different data representations of graphical images. Two basic types are bit-mapped images and graphical descriptor language specifications.

The first presumes the drawing is rendered like a half-tone newspaper type image and the second presumes the drawing is rendered in a calligraphic (stroke written) method. A PC screen is an example of the first style and an Oscilloscope is an example of the second type. Good plotters use the second method and have the best resolution.

After testing PostScript - which has become the defacto standard for laser printers for both text and graphics, I found that there was a bug in Word Perfect's GRAPHCNV routine which converts a graphical file into WordPerfect's internal (bit mapped binary) graph (.WPG) file type.

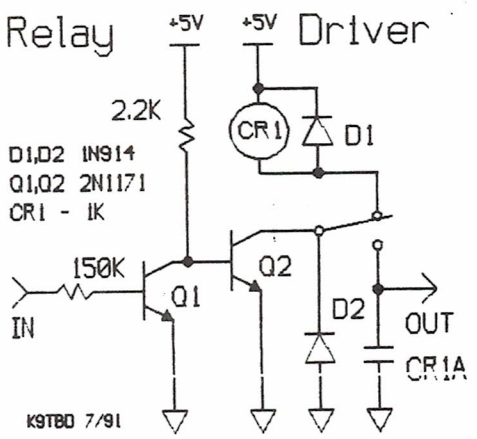

The computer aided design program (CAD) that I used could create a Hewlett Packard graphic (.HPG) file and Wordperfect's GRAPHCNV program translated this rendering without a hitch.

Since the HPG file is pure ASCII (even though it looks funny with all the pen-up and pen-down commands for a plotter). To send text and graphics over radio, put your text in pure ASCII and your graphic in HPG (also pure ASCII) as most all computers can use these forms. 73 Joel K9TBD

Editors note: This entire story, including the drawing, was transmitted to me by packet radio. W3PYF Editor



PUBLIC/EMERGENCY SERVICE COMMUNICATIONS

by Amy, KD3TI

Northampton County ARES Coordinator

As we all know, one of the primary purposes of Amateur Radio is "Recognition and enhancement of the value of amateur service to the public as a voluntary, noncommercial communication service." (quoted from Part 97.1(a) of FCC regulations.



We all want to help out in times of emergency, but how many of us have really considered what we would exactly do, or how we would be able to handle communications in a true emergency? There are few 'Official Training Exercises' conducted throughout the year, and our weekly nets provide little practice in handling traffic within a directed net.

As a public service, DLARC provides communications at many times and many places during the year. We've all heard the requests for help at bikeathons, walkathons, parades, Derriere in the Delaware and similar events. Not only are these GREAT public relations opportunities for our club and the Amateur Radio Service, THEY'RE TRAINING OPPORTUNITIES FOR YOU!! Here, under non-emergency conditions, you'll have practice at working with a directed net, dealing with officials, dealing with established temporary or emergency station set-up and passing local traffic.

You will do virtually everything you might need to do in an emergency, without the pressure of the chaos that is sure to result when we're called on to fulfill our emergency communications purpose.

I would like to encourage everyone to try to participate in at least one or two of these events each year. An average event requires only four to six hours of our service, and if you are only able to attend part of an event, that is two or three hours of valuable experience you would not have had otherwise.

In my experience as a police and fire dispatcher, I have seen what happens to communications when well meaning but inexperienced individuals try to help. As the ARES Coordinator, I am concerned that we be able to provide prompt, effective communications when needed. Please help assure that we do, indeed have a group of trained and experienced operators ready to answer the call. Again, I would like to encourage every club member to participate, to whatever extent possible, in least one public service event a year.

****

SE-WY-CO DEDICATION

Thanks to assistance from our dedicated Amateurs, the July 10th parade celebrating Se-wy-co (Lower Saucon) new fire-ambulance headquarters and several new vehicles was a great success. Our alternate repeater on 145.11 functioned well for us and our presence helped keep things flowing smoothly and safely for the many spectators and nearly two hundred fire, ambulance and rescue vehicles that participated. The blistering temperatures of nearly 100 degrees made the safety part of our communications very important.

Participating were KB3ANG, Greg; WF3H, Bob; N2MWQ, John, KA2ONZ, Bruce; KA3YAT, Bob; WM3W, Jason; N3GSV, Louise and KD3TI, Amy.

de Amy, KD3TI

****

FOR SALE

ICOM 228A 25 watt 2 meter transceiver. PTT Mike, Mounting bracket; 2 meter spider antenna; manuals included. Never mobile:
Call Vic, WM3B at 868-8188. Asking $275.00

****

WHEN YOU SEE HIM, SAY THANK YOU

by Clarence, W3PYF

All of us wear our DLARC badges with pride and although most of us think that all this happens automatically, make sure you thank WD5BRP, Dave when you see him.. He has taken over a big job, and since we began them he has spent many hours making those name-tags that we wear with honor.

From me, and the rest of the club..

THANK YOU!!!

****

REMEMBER THE MEETING on SEPTEMBER 5th IS IN THE AUDITORIUM, NOT KIVA HALL.

YANKEE DOODLING

IDEAS-From Field Day--For PA QSO Party

It's hard not to learn a few lessons during a contest or operating event like Field Day. Sure, we did well, but how could we have done even better? Here are a few ideas heard around the coffee pot up at Hackett Park.

1. RADIO VARIETY. There are many radios which show up at Field Day, and each operates a bit differently. A couple of times rig problems were suspected, but turned out to be operator ignorance. If you bring your radio to Field Day why not write up a 1-page simplified operating guide and hang it on the radio? (The alternative is stick with the radio and train each new operator.)

2. BAND SHARING. 40 and 20 meters are usually good for the whole 24 hours of FD; 15 and 10 are daytime bands in this part of the sun-spot cycle. 80 and 160 are always night-time bands in summer. Combining two bands at a single position (i.e. 80/10 and 160/15) can keep the station busy for the whole contest--not just half. We had 80/10 paired this year and it seemed to work pretty well. Next year 160 with 15?

3. TWO STATIONS ON 10? Yep, we had this with the Novice/Tech station and a W3OK station both operating between 28.3 and 28.5. The N/T's can only operate SSB here, but this is a segment with so much activity that the General+ station must be here, too. Both at the same time? Not if you want to communicate and avoid burning out a receiver front end. Possible solutions are:

1. N/T station on 10 CW for several half-hour intervals, then back to phone, or
2. Mounting 1 10 meter beam vertical, the other horizontal for 30 db. cross polarization attenuation,
3. Coordinating frequency information between the two positions using H-T's. (i.e. 1 station < 28.325, the other above 48.475), both running, then switching frequencies. Problem: neither can hunt and pounce--except in those limited bands.

This problem will go away in a couple of years when 10 is dead. Till then, we have to plan to share.

OTHER CONTEST IDEAS--For PA QSO party

Here are some ideas which might help out in October, and next Field Day, too.

BOOM MIKE HEADSETS

Contesting today often involves the use of a computer for logging. Even if you don't use a computer, you still have to keep a paper log and a cross-check (dupe) sheet. Either way, you have your hands full. Several people really noticed a difference when they began operating either the 40 M. or 15 M. positions with a headset-boom mike after using the desk mike at the 75 M. station at Field Day. There was one less thing in the way and everything just seemed a little smoother & faster. If you want to make an improvement in your home station set-up--get a boom mike headset. Here are several good ones.

Hy-Gain's Telex division just started making one again, it's called *The Contester* and is available from most of the major dealers, AES, HRO, etc. This is typical of the Telex style with the cup-type earphone which really excludes outside noises. The mike element supposedly accentuates frequencies between 100Hz-8000KHz. The microphone shuts off when the boom is rotated up over the headband. Price? ±$100. Want to spend less? Similar older Telex B-M headsets can be found at hamfests for as little as $15.

If you're under 25, you probably grew up wearing a *Walkman*™ and you're comfortable with the lightweight foam padded headsets. If so Heil Audio has the headset for you--either the BM-4 or BM-5. Both have a lightweight headset along with a slim boom containing one of the most effective microphone elements currently available for amateur communications. The BM-5 is more of a full speech range element, while the BM-4 peaks at 2KHz and rolls-off sharply < 500Hz and > 3000Hz. Most folks seem to prefer the BM-5. The whole headset costs about $70 but is seldom available in the used equipment market. Disadvantage? You can hear all the conversation around the station, or the XYL.

FOOTSWITCHES

Another convenience item is a footswitch for transmit-receive (T/R) switching. Most boom-mikes don't have a push to talk switch so you need another way to switch.. Sure, you can use VOX, assuming the generator or a crying baby doesn't key the transmitter, and the VOX delay is set just right, and you talk loud enough to key the VOX, and.... I like a footswitch! Its simple, reliable and effective. This one is cheap-- about ten bucks at the local Radio Shack™, sometimes $2 at at hamfest.. Most modern radios even have a rear panel PTT jack available.

SPEAKING OF CONTESTS

I just heard that a certain western PA radio club is planning to stomp DLARC into the mud along the Delaware River. This Mercer county gang of radio cut-throats has the best operators in WPA & Ohio lined up to do **3 MILLION+** points! They want to keep DLARC from a triple sweep and bring the trophy back to NW PA. Just thought you should know.

09.91 **73 de K3YD**

BULK RATE
U.S. Postage Paid
LEHIGH VALLEY, PA
PERMIT No. 138

THE DELAWARE-LEHIGH AMATEUR RADIO CLUB, INC.

The
W3OK CORRAL

RD #4
GREYSTONE BUILDING
NAZARETH, PA
18064

Robert A. Green KA3YAT
346 Crest Drive
Whitehall, PA 18052

All Amateur Radio Operators are invited to participate in the DLARC, RACES & ARES nets on 146.70 W3OK/rpt, with an alternate of 145.11, W3PYF/rpt.
The Nets are held on Sundays at 9:30 AM and on Wednesdays at 7:00 PM.

****

DLARC INFORMATION LINE 820-9110

****

The W3OK CORRAL is published monthly and is the Official Publication of the Delaware-Lehigh Amateur Radio Club Inc.

****

1991

CLUB OFFICERS

President - Ray Bilger.....W3TDF..346-7313
Vice President - Wm Van Horn....K3CP...691-5979
Secretary - David Blankenship....N3EYT..974-8749
Treasurer - Richard Dech.....KA3MOU.837-1585

****

BOARD OF DIRECTORS

Bill Goodman.....K3ANS..258-5063
Robert Kratz.....KU3K...866-5879
Clarence Snyder.....W3PYF..252-2109
Robert Neifert.....KW3W...865-1641
Robin Mosley.....WA3T...820-0944
William Werner.....W3FYK..691-0963

****

STAFF

Editor - Clarence Snyder.....W3PYF..252-2109
Technical Editor - Wm Van Horn..,K3CP...691-5979
Digital Editor - Joel Elston.....K9TBD..252-1515
Yankee Doodlings - Blair Bates...K3YD...865-0687
Circulation - Dick Peischl.....KC3CR..759-0294
Mailing List - Robert Mulrooney..KB3RI..253-7710
Printer - Norm Zoltack.....K3NZ...799-4044

****

All regular meetings of the D.L.A.R.C. are held on the first Thursday of each month at 7:30 PM at the Northampton County Community College

TALK IN ON 146.70

****

Any comments or articles contributed to this newsletter should be addressed to
CLARENCE SNYDER W3PYF, Editor
717 PORTER STREET
EASTON, PA 18042-1548