DELAWARE-LEHIGH AMATEUR RADIO CLUB, INC. W3OK

March 1992

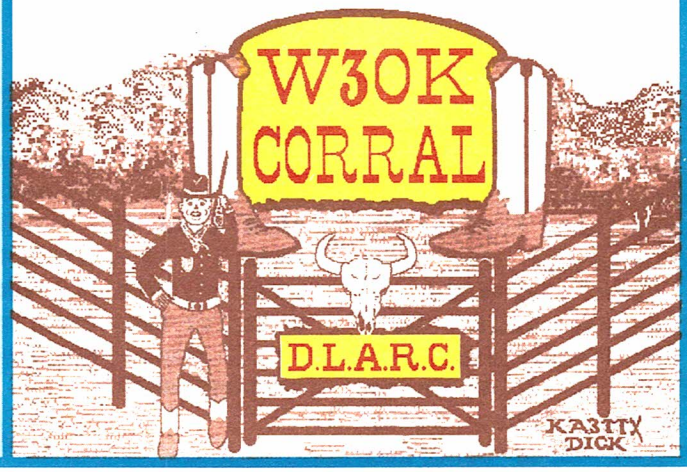

SPECIAL SERVICE CLUB

ARRL Affiliated Club

IT'8 RAFFLE TIME

NOW IS THE TIME!

This meeting in addition to the regular meeting and program will feature the culmination of our yearly raffle. The prize tickets will be chosen during this meeting. If you have not mailed your tickets to John, N3IGA, do it now!

Remember that without this raffle we could not keep our dues at it's present rate. Do your part. **Sell, Sell, or Buy!**

HAMFEST DATE SET
by Bob, WF3H, Chairman

The DLARC, Inc. Hamfest is now beginning to take shape. The date selected, Sunday, August 16, 1992, has been approved by the Plainfield Township Commissioners. We will soon be printing a flyer to mail to other clubs in the Atlantic and Hudson divisions, pending ARRL approval.

The flyer will contain information on the day, date and time; a local map; special features including V.E. test session, flea market-tailgating, and vendors; power for basic equipment testing; admission information ($4.00 at door, $3.00 for pre-registration, unlicensed spouses free); $6.00 tailgating and $8.00 inside vendors fee (includes admission); contact person (WF3H); Vendor set up time (6:00 a.m.); sanitary and food facilities; and talk in frequency of 146.70 (W3OK).

There are a number of committees established including Security (N3HQE chair); Equipment vendor relations; Talk-in (K3ANS); Fire Police (N3GXW), Insurance (N3GLZ), and Tech/Service volunteers, (KA3YEB) Exams; Parking; Community relations and exhibit/layout committee. Please feel free to volunteer for any which interests you. Our next step is to meet with the Township commissioners to get the necessary permits, meet with food vendors from local community service organizations, and with the fire-police to set up procedures.

Details to be finished include getting porta-johns, other mailing lists, and various fine-print things. Your help in volunteering is appreciated (besides, if you don't volunteer, I may draft you!). Thanks, and let me know if there is something I've missed. This is our hamfest and your input is sincerely needed. de WF3H, Bob

SKYWARN SESSION AT MARCH 5th MEETING
by Bob, KB3YS
ARRL Section Manager EPA

I feel privledged to have been asked to attend your next Club meeting and again present the Skywarn severe weather training. We are going to teach you what type of cloud formations to watch, and the tornado danger signs.

We also will be looking for interested persons that have time to act as Net Control Stations at the Allentown Office of the National Weather Service. The session it self will take about an hour and a half. You will see a slide presentation and then two short training films. This is a very informal meeting, and I invite questions into the subject. I hope to be able to bring one of the staff meteorolgists from the Allentown Weather Service Office to this meeting...They handle the real tough questions! I think you will find this a fascinating meeting, and I guarantee that you will look at the sky a little differently in the future. Hope to see you there. de Bob, KB3YS, SM/EPA

SCHOLARSHIPS AVAILABLE

THE FOUNDATION FOR AMATEUR RADIO, INC, a non-profit organization with headquarters in Washington, DC, plans to administer forty-five (45) scholarships for the academic year 1992-1993 to assist licensed Radio Amateurs. The Foundation composed of fifty local area Amateur Radio Clubs, fully funds five of these scholarships with the income from grants and its annual Hamfest. The remaining forty (40) are administered by the Foundation without cost to the donors.

Licensed Radio Amateurs may compete for these awards if they plan to pursue a full-time course of studies beyond high school and are enrolled in or have been accepted for enrollment at an accredited university, college or technical school. The awards range from $500 to $2000 with preference given in some cases to residents of specified geographical areas or the pursuit of certain study programs.

Additional information and an application form can be requested by letter or QSL card, postmarked prior to May 31, 1992 from:

FAR Scholarships
6903 Rhode Island Avenue
College Park, MD 20740

LETTERS TO THE EDITOR

==========

ALINCO A+ FOR SERVICE

Everyone has heard complaints of companies that are indifferent and unconcerned about their customers. I've encountered one that is a joy to deal with. I purchased a new Alinco DR-590T in late November and installed it in my car. After about two weeks, on the first cold weekend of the season, the memories went berserk. The data I had loaded was dumped and each channel now contained the same frequency and auxiliary data. I had no difficulty contacting Alinco, their reps told me to return the radio UPS red at their expense and they would repair and return it.

In six days I had the radio back with a new CPU. To my dismay, when I turned it on at home, it did the same thing. I was connected to the service technician this time and after I explained the situation he told me to ship the radio back, UPS, again at Alinco's expense and this time they would send me a replacement radio. It only took four days for them to resolve this dilemma. I have now had the new unit for two weeks and it is working flawlessly. I would not hesitate to deal with the company again.

de Amy, KD3TI

****

Dear Editor:

My heartfelt thanks to you and a few of your club members for helping to make our recent school ham radio presentation a success.

Thanks are in order to the following for helping me to locate a copy of the VHS tape "New World of Amateur Radio". KA2UUV, W3PYF, KA3MOU, WF3H and K3ANS. Bill K3ANS heard what I was doing and lent me his personal copy of this video, which I highly recommend for use in any group presentation as an introduction to ham radio and what we do.

Helping Don-KB2EBL and me at the 7th grade social studies class at the Kingwood Township Elementary school in Baptistown, NJ were DLARC members Terry-KA3UUV and John-N3KGO.

Our presentation consisted of the following:

Basic introduction of our selves, showed video, short question and answer session about the video, 2m phone demonstration, 2m phone patch, worked 10 meter dx from Grenada and San Francisco. Demonstrated packet radio and tried to work a MIR pass. Antennas were 2 meter and a Multiband trap vertical in the school yard.

If anyone knows of a school who would like a demonstration like this, contact KB2EBL or me.

73 Larry Ashton, N2OCW

THINGS TO THINK ABOUT!

The first electrician must have been NOAH, because he made the ark light on Mount Ararat.

Lighting is electricity in a hurry.

They are talking about one of the participants at meeting B. He told Ray W3DTF, that " I can go on the wagon any time--if he could just find one with a bar.

IMA LIDD

DIODES PART 3

by Van, K3CP

Elmer greeted Ima Lidd by saying, "Ima, Do you remember the last time we met, we ended by talking about a full wave rectifier?"

"Yes, I do, Elmer," replied Ima. "I was hoping that you would continue the discussion on diodes."

Elmer continued. "Well, yes, there are a few more uses for diodes that we should cover before we move on to another subject. Take a look at figure 1. This circuit is also a full wave rectifier, but unlike the one we studied the last time, this rectifier does not require a center tapped transformer. It's known as a bridge rectifier. Let's take a look at how it works. Remember the polarity of the AC voltage at points A and B is rapidly changing. On a 60 cycle per second supply the polarity is changing 60 times a second. Which way will the current flow when point A is positive with respect to point B, Ima?"

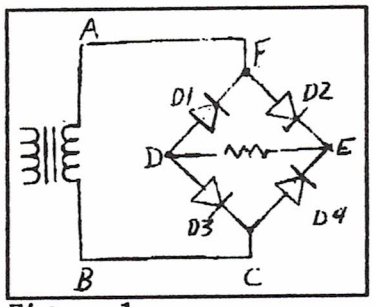

Figure 1

"Well," said Ima, "let me think about that for a minute, Elmer. When A is positive, the current will flow from B to the junction of diodes D3 and D4. The current sees two diodes at C, the cathode of D3 and the anode of D4. It will flow through D3 because its polarity is correct for that."

"That's right," replied Elmer. "D4 blocks current flow on this half of the cycle. OK, now the current is at point D. It now sees another diode, D1, and a resistor. Again the diode in it's path is reversed biased so it must go through the resistor. It continues through the resistor and at point E it sees the cathode of diode D2, which fortunately enough puts it in the forward bias condition. The current flows through D2 to F and back to the transformer at A."

"Boy! that's really something," said Ima. "The resistor at D and E could be my rig or any other circuit requiring a DC voltage."

"Not so fast, Ima, that's only half of the story. We examined only what took place on one half of the AC cycle. When the polarity at A and B reverses, the opposite events occur. Now the current leaves point A and flows to F where it sees two diodes, D1 and D2. For reasons mentioned above, it chooses to go through D1 to point D and then through the load resistor to E and down to D4 to C and then returns to the transformer at point B. Now we have traced a full cycle of the AC wave form. That's all there is to it. From now on it repeats the above activity, over and over again. Did you notice that the current went through the resistor in the same direction on both halves of the AC cycle? What do you make of that, Ima?"

"Well, Elmer, if the current is always flowing in the same direction, that would be direct current!"

"Absolutely right, Ima. The polarity is always the same with point D being negative and E being positive. And this is in spite of the fact that the polarity is constantly changing at A and B. The same thing would happen if we replaced the transformer with a battery or other DC supply. No matter which way the battery was hooked up at points A and B, the polarity across the resistor would always be the same. Suppose the resistor was your radio and you hooked it to a DC supply at A and B and you got the polarity wrong - what would happen, Ima?"

"The radio would work and no damage would occur to it even though the polarity of the DC supply was wrong. That's very interesting, Elmer. Diodes are surely useful devices to have around the ham shack."

"Yes, they certainly are," replied Elmer. "Just remember that semiconductor diodes consist of a junction of two different types of materials - Commonly P and N doped silicon. The P end allows carriers (current) to flow through only when it is biased properly. This occurs because opposites attract we said. When the polarity at the P end changes the carriers are repelled, because similar charges repel each other."

"Thanks, Elmer," replied Ima. "That sure is interesting and as you often said it wasn't too difficult to understand. See you next time.

de Van, K3CP

FROM THE OLD GROUCH

by Clarence, W3PYF

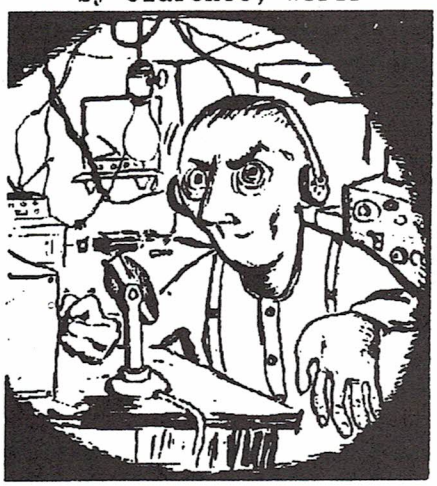

I will be starting a new column with this issue, please feel free to send me what you like for this informal ramble.

First I want to thank Barry, KU3X for his articles in the last newsletter and the ones in this issue. I look forward to many more.

With the DLARC Hamfest now set, lets start getting in touch with, chairman Bob, WF3H and tell him what you would like to help with.

I want to congratulate 9 year old member Chris, KA3YFK on upgrading to General. Keep going Chris.

Also, our 14 year old Extra class, Beorn, N3KAQ is now WU3M. Sort of makes me wonder if some of us older hams, may need some practice. Beorn never got his club badge with his N3KAQ on it, and now he will have a new one with his new call.

As a follow up to the Christmas City W3OK operation WF3H says new certificates have been printed for those who worked the Xmas city event. Norm, K3NZ redesigned and printed these beautiful certificates at no cost to the club. They are being sent out by Dave, N3HQE, and Adrian, KA3YEB.

To help along those folks interested in upgrading their CW skills, WF3H is conducting CW practice on the K3LPR repeater (146.775/input 146.175). The schedule is: Sunday, Tuesday and Thursday at 9 P.M. for 6 wpm, and 9:30 P.M. for 14 wpm. Practice may not be conducted occasionally due to other commitments. At this time, CW at 20 wpm is not in the plans, but if interested, let Bob know.

TAKE THE CW CHALLENGE

by Dave, N3JGX

Why do I work CW? Simply because it's the biggest challenge of my short amateur career. It's probably yours too everyone knows how to use a microphone,but it takes dedication to get back to basics and start pounding that brass.

You may argue that CW is obsolete, but you may also find that some of the high-tech modes of communication get boring in a hurry. Some like packet are interesting tools, but CW is an art form. CW may be difficult and frustrating at times, but never boring to me.

I never had the advantage of learning with computers. Instead I used tapes, W1AW and 8real on the air qsos. The latter is the best way to improve in a hurry! If you like to QSL you will find the return rate is higher on CW QSOs as the comradery among brass bangers is amazing!

If you like dxing CW will double your opportunities to pick up that rare one. Some will argue that anyone can send ur 599 73 to you. That's contest CW where speed is the challenge.

No i'm talking about a major one hour plus ragchew guaranteed to get the old grey-matter working! The intensity will make an hour seem like five minutes!

1. A couple of hints if you are just starting out: jot down 5 or 6 things to say before hand. That way you can concentrate on sending.
2. Keep it fun, a little humor makes you listen closer. Try to copy as much as possible so you can comment on your friends message.
3. Work with a group of three or more to give yourself a break and practice copying different styles.

I would like to invite anyone to participate in a couple cw nets the I frequent:

The Tireless Wireless net meets 8:30 pm nightly for 20-30 wpm practice on 3.540.

Listen for AC4HK, KB2KAT ,N3JGX, AA2AE and the rest of the gang.

The Brass Bangers net meets nightly at 9:30 pm for 5-20 wpm practice on 28.175. We will QRS for beginners. Listen for N3JAF, KA3YXB, N3JGX, KA3UIU.

de N3JGX Dave

** CONTEST CALENDAR **

by Barry, KU3X

Mar. 1-2	Wisconsin QSO Party
Mar. 5	West Coast Qualifying Run 10-60 WPM
Mar. 7	W1AW Qualifying Run 10-35 WPM
Mar. 7-8	ARRL International DX Contest, phone
	YL-ISSB QSO Party, phone
Mar. 13-15	Japan International DX CW Contest
Mar. 15-16	Bermuda Contest
Mar. 17-18	Clara 25th anniversary Contest
Mar. 20	W1AW Qualifying Run 10-60 WPM
Mar. 21-23	Virginia State QSO Party
Mar. 28-29	CQ WW WPX Contest, phone

The Japan DX Contest starting on the 13th is always a lot of fun. Ten and fifteen meters are good bands to work in this contest. Some of these hams are running six or seven element monoband yagis on fifteen meters. Don't rule out the other bands. Check forty meters for longpath in the early evening and you may even hear a few JA's on eighty meters.

ARRL International DX CW Contest is a biggie. If you can not work 100 different countries and get the club's DX-100 Award in this contest, you are not trying at all. You can do it with 100 watts to a few dipoles. You are the target in this contest. The DX stations are trying to work you.

de Barry, KU3X

HANDI-HAMS TO CELEBRATE 25 YEARS

The Courage HANDI-HAM System will be 25 next year, and to celebrate their Silver Anniversary, they are sponsoring the HANDI-HAM Jubilee Contest, beginning January 1, 1992 (0000Z) and ends January 1, 1993 (0000Z). The object of the contest is to obtain a handsome commemorative certificate by working 25 HANDI-HAM members. Any QSO during the contest year with a member, regardless of band or mode, counts as a valid contact. HANDI-HAM members will affix a special Silver Jubilee seal to each of their QSL cards during the contest period.

The commemorative certificate will be issued to any amateur operator who verifies the contacts by sending 25 QSL cards with Jubilee seals affixed to HANDI-HAM headquarters. Please include one dollar (U.S.) to cover return handling.

73 de Bill/WA3SCW @ WB3V.MD
ARRL MDC Bulletin Manager

THE GAVEL SPEAKS

THANKS! from Robin, WA3T

A few weeks ago I saw the inside of a hospital for the first time as a patient. The surgeons did their thing well, and and the nurses were competent and caring, but I really can't recommend the experience to anyone who has a choice!

Beforehand, I knew that the spirit and morale of a patient are important to recovery, but I knew it only at the intellectual level. Now I've had a chance to experience the truth of this at the gut level (no pun intended!). A key factor in my recovery was support from my family and friends from work and church, and from many area hams.

I've said before that ham radio isn't just a technical hobby, but a group of people who, through their common technical interest, come to care for each other and strongly support each other.

This is another truth I've now experienced directly. It was good to see and hear friends, and to look at those cards; QSL cards, get-well cards, humorous cards; cards of all kinds.

To all my friends, thank you. It's good to be back. Your support helped more than you probably realize.

73 de Robin, WA3T

FOR INFORMATION ABOUT CLUB ACTIVITIES

CALL

DLARC INFORMATION LINE

820-9110

WHEN YOU GO TO PHILADELPHIA

Stop into the Franklin Institute. Through the efforts of the Philmont Radio Club, there is now a full Amateur Radio Station, W3TKQ operating there, with all modes and all types of antennas.
Take your license with you.

DIGITAL COMMUNICATIONS U (.....*..) F
by Joel, K9TBD, S \ / / R
Digital Phones? E ---o--- E
D METER E

With the coming of all digital communications into the home, I was considering whether the current Analog phone should be digitized. This was accomplished, but not in the way you think! Let me preface this article with the fact that I have a 19 year old son who is a computer junkie and a 16 year old daughter.

Do you think that I have a shot at the LL phone circuit? Here is how, without all the added features (which cost extra money). The December '92 article was devoted to fiber in the home. It is not here yet - but hopefully soon -then we will have all sorts of options to get a handle on the phone system as originates from your home, but, until then, here is a simple solution to using one phone line for Mom/Dad as well as the Kids! Current Technology:

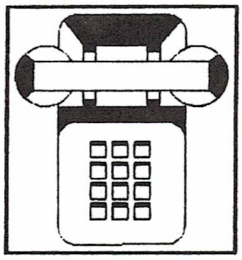

The current phone system is an analog system - here's basically how it works -without giving out too much detail. The central office powers your phone with a DC signal - that makes all of the innards work. To ring your phone(s), a super-imposed AC signal is sent down your line. Inside your (regular or solid state phone) is a detection circuit which senses whether an AC signal of the right frequency and amplitude has been put on the line. If so, this signal is sent to your ringer circuit. When you answer (pick up the phone) - a different condition exists on the line between your phone and the central office. This establishes the connection. You 'talk' to the other person with an Analog signal - sort of like a resistor (microphone) changing resistance with your voice, and this causes (by Ohm's Law) a varying current in the wires. The other end senses this and,in return, sends the varying signal to your earpiece. That's how we currently talk.

Back to my problem:

For a living, I compute! This means that I have to get to a computer on the other end of a telephone line (no fiber in my home yet) at various times of the day. These times of the day always conflict with - "C" wishes to contact a BBS, "H" wishes to talk to a 'boy of course-'. Where does this leave mom and dad? I'll crank up a terminal program on some computer or use a dumb terminal - but there is no indication that the 'line-is-in-use'! So the complaint is -(after the sequence - deet,deet-,deetl,diit,deit,deit,diit) those are the tones sent over the wire - and also over my daughters conversation, "Dad, Get off the phone!".

Simple solution:

I have a spare (junk) VOM - Volt, Ohm, Meter. It does not need any batteries like the nice digital ones today. Put it across the line (two terminals on the phone outlet) making sure that you are on the right Voltage Scale and the polarity is set right. Viola! That is all there is to it - I now know when the phone is in use and do not disturb the phone signalling system with the additional load of a simple high impedance meter. The meter has an Analog dial and two marks were places with a RED grease pencil. On mark signifying ("IN USE") and the other mark ("FREE"). Whenever the dial on the meter says "FREE" - I hit the button on my computer to dial my computer at the office knowing that there will be no domestic disturbance. Simple, effective, no-hassle, and you do not bother the rest of the family whenever you "pick up the phone" with your computer. For the next generation of phone we will probably have to put a micro-processor in the circuit to decode all of the stuff coding going over the 'phone-line' as TV, Voice, Data, - who knows what will be there all the time. ps - Use only a high impedance meter to watch the 'phone line - so as not to imbalance the 'phone system. Voltages (especially during ringing) will give you a nasty jolt - so if you're timid - don't play with it.

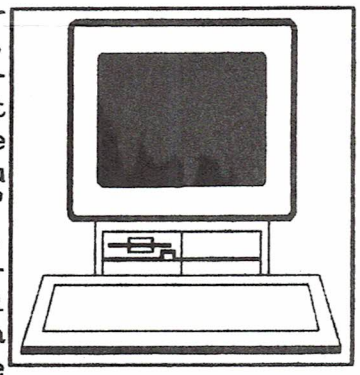

73 Joel, K9TBD

NOVICE CLASSES

BEGIN MON, MAR 2nd
Greystone Building
Nazareth

HOW'S YOUR CW

by Barry, KU3X

There is more to ham radio than SSB. Did you ever turn on your radio and not hear anything on ten, fifteen, or twenty meters? Then you go to forty meters and find out that radio Moscow can be heard all over the place and there isn't any room for you? Next move is to try seventy five meters. WOW, can't find any clear spot on that band because everybody from the other bands moved there. If you are lucky to have some wire up for one hundred and sixty meters, you then check out that band only to find out that the noise level is 40db over S9. If this hasn't happened to you, then you must be new to ham radio.



Now what? Does CW enter your mind? Why not? You do not have to send at 30 WPM to have fun on CW. There are a lot of hams on CW sending at 10 WPM. Sure there are QSO's at 20, 30, 40, and even 50 WPM. That doesn't mean that you have to go that fast. There are some stations out there that don't even own a microphone. You need CW to work these guys if you want to work them.

How is your fist? I hear some real bad CW on some of the bands. If you really want to know how you sound, send some practice CW into a tape recorder and play it back to hear how you sound.

If it doesn't sound so hot, why not? Are you holding the straight key correctly? If you are using a mechanical bug, are the settings correct? If you use an electronic keyer, make sure that you set the weight control correctly. If you are sending at speeds of less than 25 WPM, then you will probably have to set the weight control full counter clock wise. Make sure you have plenty of room on your desk top to rest your arm on up to your elbow. Make yourself very comfortable. Use headphones to block out any outside noises. If you have a hard time copying code, the last thing you need to hear are distracting noises. Don't use full breakin unless you are comfortable with code. Full breakin is a great tool but it can also be distracting.

Now you can use the "Q" signs for what they were really intended for. QTH means," my location is". Don't send, " my QTH is...." because you are really sending, " my my location is is...". Don't drag out the basic information. Here is an example of the first exchange after the other station answers your CQ: YU3ET de KU3X Tnx fer call ur 599 name Barry QTH Bethlehem, Pa BK If you want to send your name and QTH twice, that's fine. Example: name Barry Barry. Use abbreviations such as wx for weather, es for and, and gud for good. If the name of the game is a good rag chew, there will be plenty of time for that.

Need practice? Try listening to W1AW any day of the week on 7.080 mhz or 3.580 mhz. At 2300 hours UTC, code speed will vary from five to thirty five words per minute. At 0000 hours UTC, code speed will be set at eighteen words per minute. The entire schedule is printed every month in QST. Also, Brass Pounders Amateur Radio Club sends code practice each Saturday, Sunday, Monday, and Thursday on 7.060 mhz., starting 2000 hrs UTC. Tuesday and Friday on 14.060 mhz., starting 2000 hrs UTC. Speeds range from twenty to sixty WPM.



Now for the hard part, "Where did I put that darn J-38"?

de KU3X SK

HILLIARD FRENCH

KA3ZQO



Hilliard French, one of the newest members of DLARC died on January 29, after a stay in Easton Hospital.

Hilliard, a brother of Harlan, N3IUW, served in the Navy during World War II received his license while still in the hospital and was looking forward to many hours of operating. Hillard, a graduate of our Novice Classes, worked for 45 years at the Lehigh Foundry. He was 70 years old. He and his wife Julia celebrated their 52nd wedding anniversary on January 13th.

From all of us in the Delaware-Lehigh Amateur Radio Club. ***REST IN PEACE.***

JUST THE MINUTES

by Chris, NU3L

The meeting of the DLARC was called to order by president Robin Moseley, WA3T, at 7:35 PM on 6 February 1992. Ninety four members and guests were in attendance.

It was moved by W3PYF and seconded by W3TDF that the minutes of January meeting be accepted as printed in the February newsletter. The motion passed with no additions or corrections being noted.

The treasurers report was given by KA3MOU and shows a balance of $4908.29. WA3MZO moved and KA3YEB seconded that the report be accepted as read. The motion was carried.

Several individuals applied for membership in the club: Jay Breish, call pending; KA3YFK, Christopher Breish; KB3FN, Lynn DeHart; K3DEM, Steve Kralick; WA3B, Donovan Deily; W3YU, Robert Walsh; KA3ZOY, Edward Poplasky; W3ZIF, Royal Kramer; WA3WLD, Wayne Bartholomew; WA3WLC, Madeline Bartholomew; WB3AMY, Robert Walsh. N3GRZ, Ned was reinstated to membership after a short absence. A motion to accept the new members was made by W3TDF, seconded by WA3BOM and passed.

Several guests were in attendance: Larry, N2OCW; Norman, N3JAF; and Bill, WA3ZXJ.

It was with great regret that WA3T announced the passing of Hilliard French, KA3ZQO. Hilliard had attended novice classes during the fall and successfully passed both CW and written tests. The next day he was admitted to the hospital and received his license while he was still there. He became a silent key having never had the pleasure of operating. We extend our sympathies to his brother Harland, N3IUW, and the rest of his family.

W3EUD sent a letter of thanks for flowers sent by the DLARC to his mothers funeral.

No awards were issued this month.

WA3T expressed his thanks for support he received from the membership during his recent illness.

The Flemington hamfest will be held on 14 March 1992. DLARC members will distribute flyers for our hamfest.

K3GQJ reported that the VE session will be held on Friday, February 7. An invitation was extended to extra class operators to become volunteer examiners. Those who are interested should contact the ARRL for an information packet and an open book examination to qualify.

NU3L reported that the classes for those studying for upgrade to General Class are well attended and will continue for two more weeks. Novice classes are scheduled to start on March 2nd; prospective students should call the DLARC BULLETIN BOARD at 820-9110 , and leave their name, address, and telephone number to receive an information packet.

K3ANS reported on upcoming programs: March - KB3YS will give skywarn instructions; April - W3WZU will talk about two way ATV; June - NT2X who is an immigrant will give a talk on ham radio in Russia.

WF3H reported on the progress of the plans for the DLARC hamfest. It will be held on Sunday August 16. Bob will have an article on the details in the March newsletter and will be considered to be part of these minutes. There is a need for volunteers to do committee work.

WF3H also reported that the Christmas City QSL certificates were donated by K3NZ - thanks Norm.

A program was presented by TOM, N3CXP on Sarex, MIR, and Amstat. Tom spoke on the interesting aspects of hams in space.

by NU3L, Chris
acting secretary

A NEW GETTSBURG ADDRESS

Is nothing sacred? Years after his death the FCC is even taking on Abe Lincoln. Just this morning I saw a bulletin pronouncing the fact the FCC had a new "Gettysburg Address".

The old one was good enough for me when I went to school but now the FCC has to get their 2 cents worth in. Before you know it, they'll attach a bill of rights to their morning constitution!!

Bert, W2USA

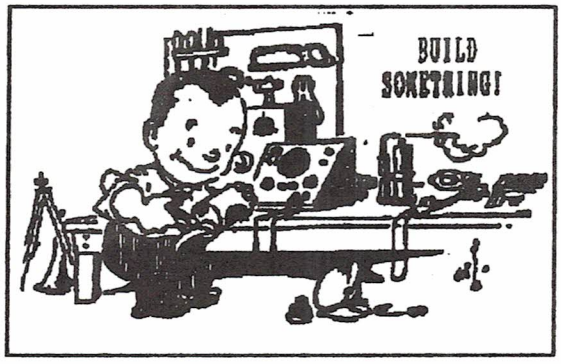

THE 27 COMMANDMENTS OF BBSING

1. Thou shalt love thy BBS with all thy heart and all thy bytes.
2. Thou shalt speaketh to the SysOp thy real name.
3. Thou shalt not POST IN ALL CAPS!
4. Thou shalt Honor thy SysOp.
5. Thou shalt only connect to a BBS two times a day.
6. Thou shalt not post messages that are stupid, worthless, or have no meaning, lest thee be deemed a fop.
7. Thou shalt use the English language properly so that thee may be deemed wise.
8. Thou shalt spell thy words correctly. Amen.
9. Thou shalt delete thine own mail.
10. Thou shalt delete thine ancient mail.
11. Thou shalt help other users so that thee may be deemed a friend.
12. Thou shalt not post anonymously when offering criticism.
13. Thou shalt keep thy foul language to thyself lest thee be forever banished.
14. Thou shalt not occupy thy BBS with thine arguments, for Verily, I say unto thee that thou shalt maketh thyself the charlatan.
15. Woe be unto the user who attempth to crash thy BBS, for such shall be cast out from the sanctuary of thy hobby and must repent by doing 40 mega-days and 40 mega-nights of penance in voice-only communications.
16. Thou shalt not post other user's real names.
17. Thou shalt not post messages after imbibing excessively of ale.
18. Thou shalt confine thy messages to those of friendship, requests for assistance, aid to the needy, advice, and advancement of thy hobby; yea, and thou art obligated to repel any who wouldst transgresseth upon these commandments.
19. If thou doth promise to reply to a message and thou doth not, then surely thou shalt spill liquid into thy keyboard and shorteth out thy central processing unit.
20. Thou shalt not giveth any false information when applying for membership to thy BBS, for Verily it is Written that whosoever shall do so will surely be found out and thy welcome on all boards will be thus be denied forever and ever.
21. Thou shalt log on properly and in accordance with thy SysOp's wishes.
22. Thou shalt not ask stupid questions that art already fully explained in BBS bulletins and instructions.
24. Thou shalt not violate any applicable state/federal/local laws and regulations affecting BBS communications, or thee will face the wrath of thy judicial system.

Entered into pkt by KC6OXK - Barry.

FEBERUARY VE TESTING

by Robin, WA3T

At the February 7th test session, 24 candidates took a total of 41 elements. There were eight upgrades and eight new licences, including...

Upgraded to Advanced:
Jeffrey S. Frantz, KA3ZIZ
Stephen F. Kralik, K3DEM

Upgraded to General:
Cary R. Rufe, KA3NGW
Walter F. Tietz, N3IZK

Upgraded to Technician with HF privileges:
Donald M. Lawson, KA3ZFW
Edward B. Poplasky, KA3ZOY
Barry R. Smith, N2PCT
Harry G. Zimmerman

New Technician with HF privileges:
Robert L. Cereghino
Charles J. Osborne

New Technician:
Caroline A. Beck
David J. Frankenfield
Kenneth R. Harrison
Domenick M. Iafrato
Richard A. Lewis
David V. Luettgen

The VE team at this session was:
John Greenage, K3GQJ (Team Liason)
Ray Bilger, W3TDF, Tom Dow, N3EBH
Chris Hornaman, NU3L, Rick Saeger, K3OO
Hank Smith, NX3R, Ken Weierbach, WC3Y
Robin Moseley, WA3T

It was very helpful to this many VE's, with so many candidates.

The next session is on March 6th; team 3 will be attending. Please call me if you are on this team and cannot make it, so that we can make sure we can properly serve the candidates.

73 de Robin, WA3T, Team Laison Alternate

All Amateur Radio Operators are invited to participate in the DLARC, RACES & ARES nets on 146.70 W3OK/rpt with an alternate of 145.11

The Nets are held on Sundays at 9:30 AM and on Wednesdays at 7:00 PM.

****

* DLARC INFORMATION LINE 820-9110 *

****

The W3OK CORRAL is published monthly and is the Official Publication of the Delaware-Lehigh Amateur Radio Club Inc.

****

1991

CLUB OFFICERS

President - Robin Mosely.....WA3T 215 820-0944
Vice President - Ann Keiser..KO3M 717.386-2797
Secretary - David Blankenship.N3EYT 215 974-8749
Treasurer - Richard Dech.....KA3MOU 215 837-1585

****

BOARD OF DIRECTORS

Bill Goodman.....K3ANS..258-5063
Robert Kratz.....KU3K...866-5879
Clarence Snyder.....W3PYF..252-2109
John Holmes.....N3IGA..837-7487
Norm Daniels.....N3GXW..262-8415
Ray Bilger.....W3TDF..346-7313

****

STAFF

Editor - Clarence Snyder.....W3PYF..252-2109
Technical Editor - Wm Van Horn..,K3CP...691-5979
Digital Editor - Joel Elston.....K9TBD..252-1515
Yankee Doodlings - Blair Bates...K3YD...865-0687
Circulation - Dick Peischl.....KC3CR..759-0294
Mailing List - Clarence Snyder...W3PYF..252-2109
Printer - Norm Zoltack.....K3NZ...799-4044

****

All regular meetings of the D.L.A.R.C. are held on the first Thursday of each month at 7:30 PM at the Northampton County Community College

TALK IN ON 146.70

****

Any comments or articles contributed to this newsletter should be addressed to

CLARENCE SNYDER W3PYF, Editor
717 PORTER STREET
EASTON, PA 18042-1548

The W3OK CORRAL
RR 4 Greystone Building
Nazareth, Pennsylvania 18064-9211

DATED MATERIAL - PLEASE DO NOT DELAY

ROBERT A. GREEN KE3AW
346 CREST DRIVE
WHITEHALL PA 18052-7204

BULK RATE
U.S. Postage Paid
LEHIGH VALLEY, PA
PERMIT No. 138